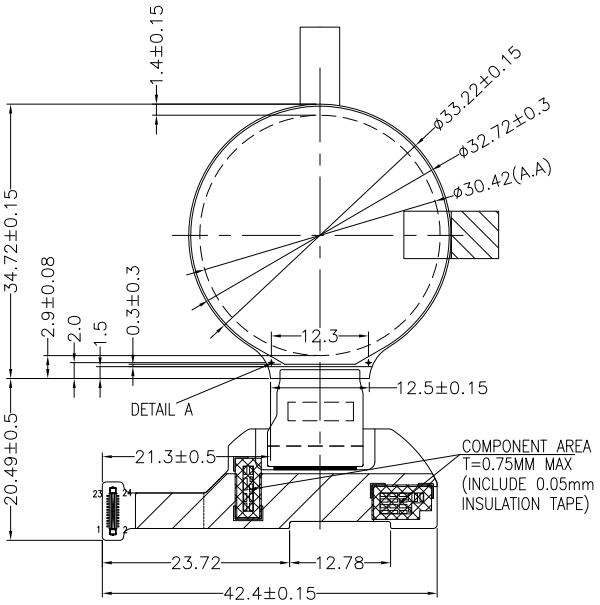

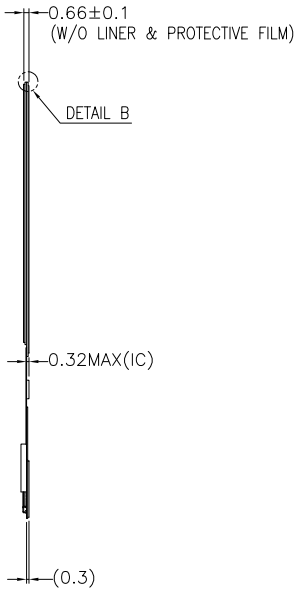

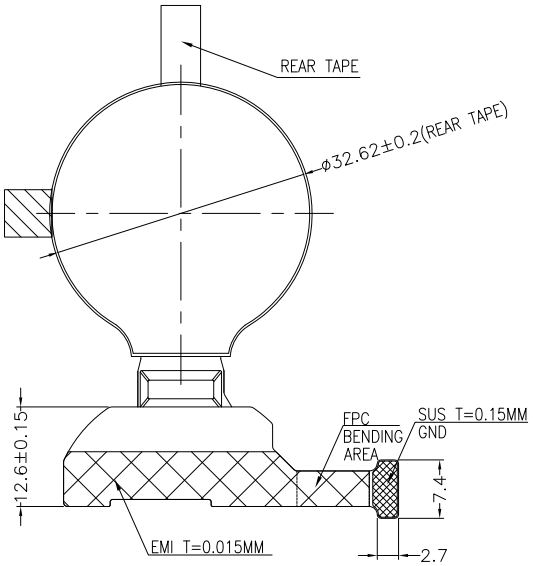

PIN DESCRIPTION FOR CN1	
PIN	SYMBOL
1	XRES
2	VCI_EN
3	NC
4	GND
5	TE
6	DSI_DON
7	CSX
8	DSI_DOP
9	SCL
10	GND
11	DCX
12	DSI_CLKN
13	SDI
14	DSI_CLKP
15	SDO
16	GND
17	NC
18	VDDI
19	VBAT
20	VDDI
21	VBAT
22	VBAT
23	VBAT
24	VBAT

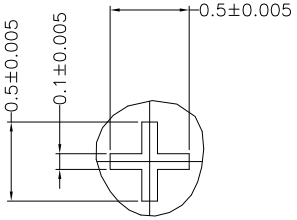

DETAIL A
SCALE 20:1

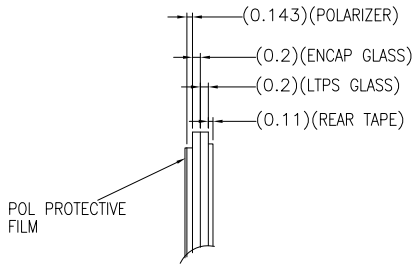

DETAIL B
SCALE 5:1

NOTE:

1. DISPLAY TYPE: 1.2" AMOLED
2. VIEWING DIRECTION: FULL VIEWING ANGLE
3. DRIVER IC: RM67162 △2
4. OPERATING TEMP.: −20°C ~ 70°C
5. STORAGE TEMP.: −30C ~ 80°C
6. SURFACE LUMINANCE: 350CD/M^2 (TYP.)
7. CONNECTOR: BM28B0.6−24DP/2−0.35V(51)
8. INTERFACE: MIPI/SPI
9. GENERAL TOLERANCE: ±0.2MM
10. GENERAL ANGLE RADIUS: R=0.2MM
11. ROHS COMPLIANT

VER.	REVISED DESCRIPTION	REVISER	DATE
02	CORRECT THE DRIVER IC FROM W022ASIC TO RM67162.	CAROL	2022.08.03
01	FIRST ISSUE	CAROL	2020.07.28

MULTI−INNO TECHNOLOGY CO., LTD.

DRAWN BY:	CAROL 2020.07.28		MODULE P/N: MI390390EO−F
CHECKED BY:		SCALE : 1/1	
APPROVED BY:		UNIT: mm	DESCRIPTION: OLED MODULE
VERSION NO:	02	SHEET NO.: 1/1	